ADVANCED MODULE 514

Coating Powders – Manufacture

By M. Griffiths

Summary

Here we investigate in depth some of the important factors that need to be controlled when making thermosetting powders. To keep products and processes within specification, coating chemists and production staff need to think on their feet, recognising and correcting the quality issues as they arise.

We also discuss the design and layout of a production unit and the economics of the process.

***Note**: It is assumed that the student already has a thorough grounding in the basics of powder manufacturing technology. Module 207 gives an overview of powder coatings and 327 expands on the manufacturing processes.*

It is expected that it will take approximately 8 to 10 hours to complete this module, including the practical work involved.

Structure of the Module

It is expected that it will take approximately 8 to 10 hours to complete this module, including the practical work involved.

Learning Objectives

For each topic in the module, there is a learning objective. These objectives are listed immediately before the Study material.

Marking Scheme

The marks are allocated to the different features of the module, as follows:

ASG1	35%
CMA	20%
End Test	45%
TOTAL	100%

An overall mark of 50% or more is necessary for successful completion of the module, with students achieving at least 40% of the marks available in each element

Self Assessment Questions (SAQs)

The answers to SAQ's can be found in Appendix 1. If you have any difficulties, go over the text again to make sure that you understand the answer. Ask your Tutor or Counsellor to explain anything you do not understand.

Tutor Marked Assignments (TMAs)

In Section 2 you will be asked to carry out a project. The assignment (ASG) can be found in Appendix 2. If you have any difficulties in carrying out the work, ask your Tutor or Counsellor for advice.

Computer Marked Assessments

When you have finished the module, a note in the text will guide you to the Computer Marked Assessment (CMA). Send the completed CMA to your tutor for marking. Receipt of the CMA at BCF will also tell them that you have completed the module and that, if necessary, they must arrange an End Test.

The Module Calendar

It is expected that the amount of learning material in this module can be completed within a month of starting.

Note: *The subject of Thermosetting Powder production is dealt with in detail in:*

OBJECTIVES

At the end of this module you should be able to do the following:

Section 1 - Factors affecting plant layout

1.1. Explain the importance of the marketing forecast when considering setting up a powder manufacturing unit

1.2. Discuss the factors affecting the selection of production plant

1.3. Discuss process considerations affecting plant layout

Section 2 - Cost considerations

2.1. Explain the importance of calculating the commercial viability of the proposed production unit.

2.2. Discuss possible methods of costing products

2.3. Discuss the factors which influence production planning and efficiency

Section 3 - Production Quality and Troubleshooting

3.1. Describe the factors commonly used to assess product quality

3.2. Describe the problems that might occur during production and the remedies

3.3. Outline the principles involved in controlling health and safety in the workplace.

STUDY MATERIAL

Section 1 – Factors Affecting Plant Layout

In this Section, we will assume that we have been asked to put forward proposals for a complete factory to produce thermosetting powders. We will consider what we need to know in order to plan the manufacturing process. We will review the plant required and consider its layout, to include the storage of raw materials and finished goods, quality control laboratory facilities and the services required.

1.1. Planning

A typical production line for thermosetting powders would consist of the three main stages illustrated in Figure 1. These stages are:

- Weighing and premixing,
- Extrusion and cooling
- Grinding and packaging.

At present, all thermoset powder manufacture is based on these techniques. In each category, there are a number of plant manufacturers who can provide suitable equipment, each offering slightly different ways of achieving the goal and providing different output rates and efficiencies.

Our choice of equipment should be based on a prediction of the volume and type of powder to be made which, in turn, must be guided by a *market forecast*. Such a forecast will include:

- guidance on the way that the market is expected to grow. Spare production capacity is all very well but expensive plant cannot be left idle and unproductive. Nor would we want a production line that had too little capacity to keep up with increasing demand. Good market information can help in planning the expansion of the production unit as the market develops.

- cost factors such as:

  - the equipment needed and its installation,
  - operating costs including those of the staff needed to operate and maintain it,
  - sales, technical and administrative support

There is no point in spending a large amount of money on a manufacturing unit which is going to run at a loss or which will take too long to pay back the capital invested.

- the location of the potential *customers*, what they make and the sort of product mix that we would expect to make. We need to ensure that the plant installed can meet the customers' needs with products that meet their specifications and are delivered on time. Our customers will want high quality product and an *efficient* service. These days, the ethos of "*just in time*" manufacturing means that customers hold few stocks, so prompt delivery is vital to their processes. Delays in production will be detrimental to the service and will cost us money. On the other hand, we do not want spare capacity, which would mean expensive machinery left unused.

- an estimate of the *selling price*, now and in the future. This data, together with our knowledge of the production capacity and factory costs, can help us to estimate the potential profitability of the project.

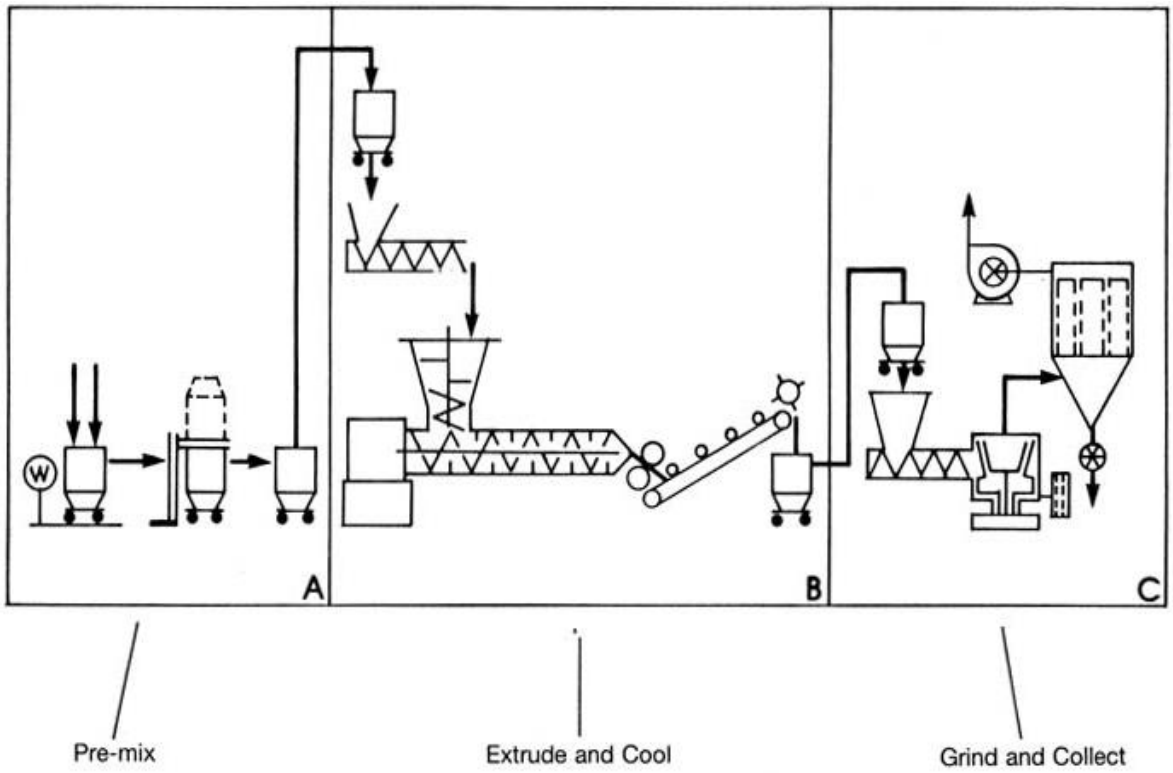

Figure 1 - typical layout of a powder coating manufacturing unit

Let us now imagine that our Marketing Department has forecast potential sales of 500 tonnes per annum this year, with predicted growth to 700 tonnes within 5 years. We are asked to provide a plan of a suitable manufacturing unit, including equipment, layout, location and cost. We must emphasise that this is a theoretical exercise and the values given are only intended to illustrate the various factors involved.

We need a plant capable of producing 500 tones per annum when installed and capable of operating at 700 tonnes p.a., *without significant extra capital cost or disruption*. There are various starting points but we will begin with selection of plant.

The batch size distribution in the production programme should be a determining factor in the choice of plant and its efficiency. If all batches of powder to be made were, say, 5 to 10 tonnes then the percentage time between batches, spent cleaning, would be relatively low. Batch yields would be high and the operating efficiency would be excellent. In practice, orders received will be for a combination of small, medium, and large quantities.

An example of this is shown in Figure 2. You will also see how we can calculate the average number of formulations per day, a value we will use later for assessing factors such as the time lost on changing batches due to the cleaning process.

100 batches @ 500 kg	(1000 kg = 1 tonne)
200 batches @ 1000 kg	
80 batches @ 2000 kg	
15 batches @ 4000 kg	
6 batches @ 5000 kg	
Annual tonnage	500 tonnes
Total number of batches	401
Average batch size	1247 kg
Average weekly production	8510kg (based on 47 working weeks)
Average daily production	1702 kg (based on 5 day week)
Average formulation changes per day	= **Average daily production** = **1.4**
Average batch size	

Figure 2 - Batch size distribution in Year 1 – Hypothetical factory

Assuming that the product mix stays constant throughout the five-year plan and achieves the ultimate, planned output of 700 tonnes per year, we need to cater for an average weekly production of 2383 kg per day. This would involve an average of 1.9 formulation changes per day.

SAQ 1 - List the main points we would need to establish before setting up a new powder manufacturing operation?

1.2. Selection of Plant

We should start by selecting production equipment so that each stage of the process will provide the production capacity we require. It is important to roughly match the capacity of equipment for each stage, avoiding potential "bottlenecks". Remember that, usually, one part of a process will end up becoming the limiting factor. You may have the capacity to *extrude* 10 tonnes per day but, if your mixers can only provide 5 tonnes of premix per day, that will limit production capacity.

The likelihood of machinery breakdowns and the need for scheduled maintenance also need to be taken into account in our calculations. We also need to ensure that the process is flexible enough to meet demand.

We will start with the extruder stage, ensuring that we have sufficient capacity there and then work out our needs for the other stages.

Extruders

The *extruder* is usually the most expensive single item of machinery and our aim should be to use this to its maximum. Ideally, we should aim to have sufficient premix capacity to enable batches to be held ready for extrusion. Remember that we may be making batch sizes ranging from as little as a few hundred kilos, up to several metric tonnes.

What size of extruder will we need for our initial annual production? Suppliers normally quote maximum or optimum output rates but the true rate will depend on the particular powder formulation. In fact, there is a strong argument for considering throughput rate at the development stage. A number of otherwise very useful resin systems are known to have very slow extrusion rates and others grind very slowly because of their relatively low T_g values. This can have a dramatic effect on production capacity, especially in instances where a replacement is forced upon a company (e.g. for reasons of health & safety, as in the example of alternative systems to TGIC-based polyesters.)

Do we want one or two extruders? These are expensive items and it is unlikely that even an output of 700 tonnes per annum would justify the cost of two units. There are, of course, advantages in having two units with regard to product sequencing, flexibility in manufacture and in the case of breakdown. For our exercise, we will assume that only one production extruder is being purchased.

To deal with the projected growth we have a number of choices. We can (a) buy a large extruder now, (b) we can buy a second extruder later or (c) we can expand existing capacity by working a shift pattern, possibly doubling or trebling our capacity. We may only need to have an extra shift for the slowest process.

At the rates predicted in Figure 2, we should first consider an extruder with a quoted rate of 400 kilograms per hour. We will assume a value of 350 kilograms per hour to allow for more difficult products.

Premixers

There is a wide choice of premixers available on the market - e.g. bowl mixers; high-speed types; ribbon mixers; barrel mixers. (See Figure 3 for examples.)

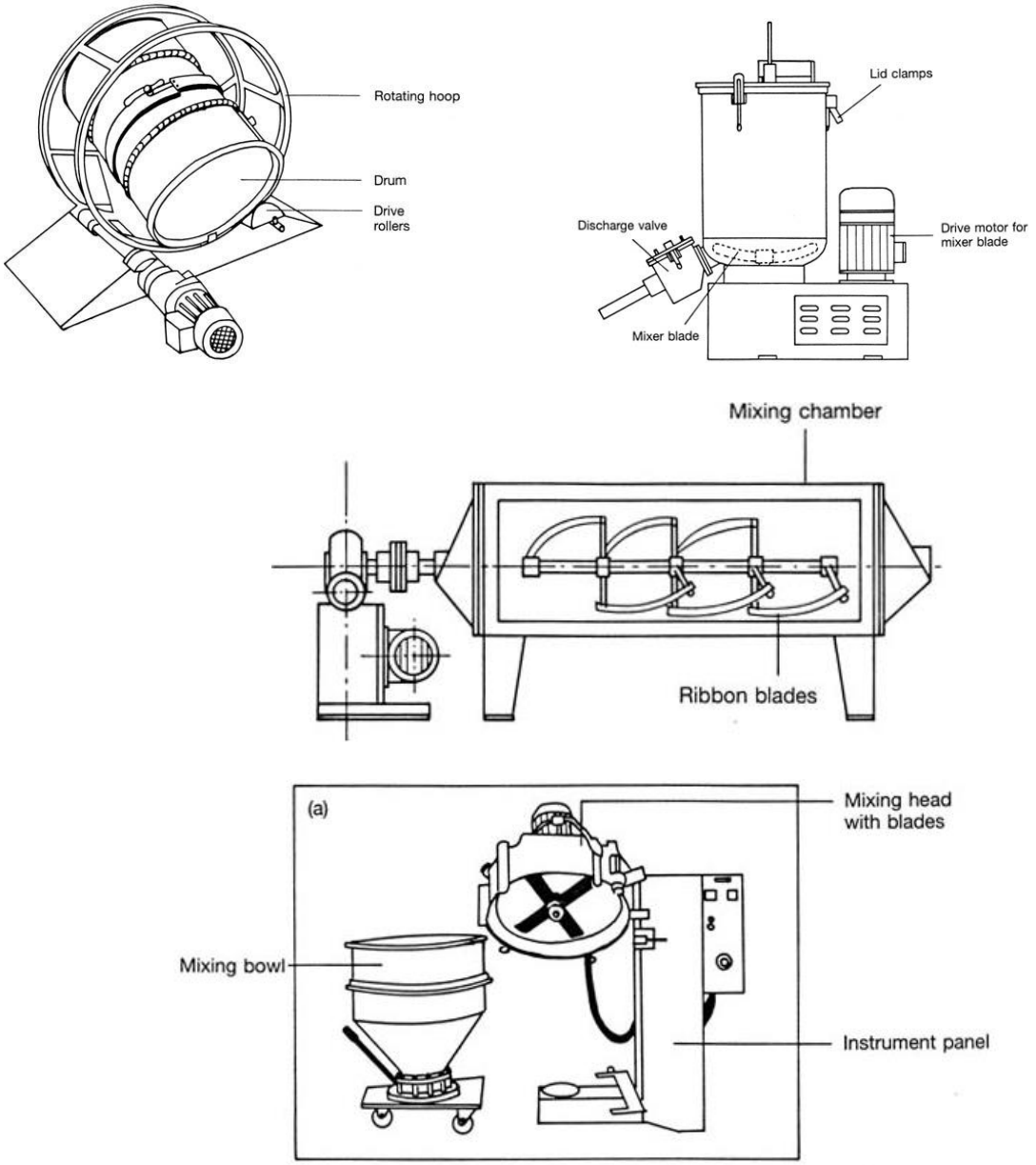

Figure 3 – Types of premixers

These offer a range of capacities, speeds and efficiencies. Some have fixed mixing bowls whilst others have detachable bowls that can be used as feed hoppers. Detachable systems can be very useful, since they allow the operator to put a premix aside for rectification or to jump the queue to a more urgent job, without blocking progress on the next product.

A high-speed mixer may take only a few minutes to disperse a premix, whereas a ribbon mixer may take 30 minutes or more. High-speed mixers tend to smash raw materials into finer powder. This can be a distinct advantage, since there is less chance of subsequent separation during feeding. However, some extruder-feed systems do not operate efficiently, if the premix is too fine.

To deal with the smaller batches we will need a premixer with a capacity of, say, 500 kilograms. For larger batches we could use this to make a number of premixes. The usual practice is to prepare these premixes in readiness for the extruder. This allows continuous feed to the extruder and will also allow time for the premixed batches to be checked in the laboratory before extrusion.

Grinding

Similar consideration has to be given to the capacity of the grinding stage such that we have a ready supply of kibbled extrudate ready to process. We do not want to waste our capacity through delays.

In the milling stage we need mill capacity to handle an average of just over two tonnes per day to meet our production target. There is a very strong case for purchasing two grinding mills with output capacity of approximately 200 kilograms per hour, each. This will give us some protection against a machine breakdown but, more importantly, it allows us to have two distinct product lines for this stage. There will also be some latitude for the very important cleaning operations between batches.

The types of grinder available include pin mill, hammer mill and pallman, machines. Pin mills are the commonest form used in powder manufacture.

Here we will need to decide whether or not we want to include an online sieve, after the grinder but before packing, to remove the occasional oversize particle that can randomly shoot through the grinding chamber. Many companies chose not to sieve but instead control maximum particle size simply by balancing airflow and classifier speeds. If properly processed, an occasional oversized particle should still melt and would not usually cause any visible defect. With no sieve, a cautious manufacturer may tend to overcompensate and grind a little too fine.

If we opt for using a sieve, again, we have a choice. The range includes vibratory, rotary or cascade (e.g. Allis-Chalmers) types.

In Figure 4 we have listed some of the points already covered regarding the selection of plant, plus some additional ones.

(i) Market Information
- Forecast sales volume
- Forecast product types
- Forecast product colours
- Batch sizes
- Sales value
- Future growth

(ii) Technical
- Ease of control
- Process flexibility
- Continuous operation
- Plant capacity
- Reliability/availability of spares
- Commercial yields
- Safe design
- Power requirements
- Water and air supply

(iii) Location
- Space requirements area and height
- Materials handling/ accessibility
- Outside walls/extraction/ explosion relief
- Water supply and drainage
- Climate
- Relation to other plants e.g. liquid paint

(iv) Cost
- Capital
- Installation
- Training
- Spares
- Service

(v) Others
- Delivery time

Figure 4 - Selection of Equipment: Factors to be considered

***Note**: Powder production equipment is discussed in depth in Intermediate Module 316.*

SAQ 2 - What factors might affect our choice of premixer type?

1.3. Process considerations in selecting plant

In the early days of powder manufacture, resins were supplied as large chunks, which had to be broken into pieces large enough for the extruder to handle. Now resins are commonly supplied as kibble or pearls so we no longer need such equipment.

Under the technical heading in Figure 4 we have listed "*ease of control*". This feature is built into modern extruders, often via *Process Logic Control* (PLC) units within the instrument panel. This helps ensure the correct start-up procedures and provides safety cut-out systems. Some machines can also be set to "learn" from the processing so that they operate within pre-set guidelines, providing in-built *Statistical Process Control* (SPC) characteristics. Control systems are also provided with premixers and grinding equipment.

The trend is now towards more and more computerised control, whereby it is even possible to program machines so that they operate at optimum processing conditions for individual products or for product types.

High product yield is important and the plant should be designed so that as little product as possible is lost in the production process. However, There are situations where a slightly higher product loss might be acceptable because of a time saving. An example of this is the use of a cyclone collector instead of filter bags. The time saved in cleaning with the cyclone can be worth more than the small increase in product loss. A cyclone also helps to separate "fines", which tend to interfere with charging and dry flow characteristics, as well as representing a significant health hazard, if inhaled. Remember though, that any waste is a "double jeopardy" since it not only represents lost raw material value but there is a cost involved in its disposal. So there is a fine balance to be drawn.

The mills should be installed in a separate room to the rest of the equipment to minimise dust contamination. The high volumes of air moved and high velocity machinery involved make grinding mills noisy and keeping them separate also helps to contain the noise problem. The process generates a great deal of friction and therefore, air fed into the grinders needs to be as cool as possible to avoid melting powder. Preferably, air is ducted and filtered into the grinding chambers from outside, (in hot climates, refrigeration units are often incorporated on the air inlet.) This also helps to minimise air movements in the workplace and to maintain reasonable working temperatures.

In the UK, the mills need be sited so that explosion relief ducts can be directed to an outside wall, to comply with health & safety regulations. Powder manufacture is a Prescribed Process, as defined in the UK's Environmental Protection Act and any air transported through the mills has to be filtered to certain controlled limits before it can be exhausted into the atmosphere.

Water is commonly used for washing premixers, extruder belts cyclones and powder collectors. The washings contain fine powder and should be passed through a settlement or separation process before it is discharged into the local effluent drains. Alternately, the slurry could be removed as liquid waste, for treatment offsite. Either way, we will need to check with local authorities, to identify any regulations governing disposal of waste.

If, as is often the case, the company producing powder also makes liquid paints, then the two manufacturing units should be kept quite separate. Particles of powder in liquid paints can cause severe quality problems (e.g. grittiness, cissing.)

Adequate power supplies must be available and, if there is a possibility of supply breakdown a standby generator may be necessary. If an extruder stops unexpectedly with raw materials in the barrel, these will begin to cure. If the extrudate is not removed quickly, it may cure so hard that it disables the machine for days, whilst the screws and linings are painstakingly cleaned.

Next we must consider the number and size of batches to be produced. We will use the distribution shown in Figure 2. This resulted in an average of 1.4 batch changes per day and these changes will include start-up time and cleaning time. Let us assume that an average time between batches is 30 minutes. We must also make allowances for maintenance and repair work and other down times including those caused by the peaks and troughs in orders placed. For the sake of this exercise we will assume this amounts to 15 percent of the available extrusion time.

In more complex operations, there will be more scope for dedicating a particular mixer, extruder and grinder as a single production. For maximum flexibility, you should avoid linking the separate components into a production line: if one breaks down, the line whole line is held up.

Remember that product mix will play a big part in the capacity of a plant. It takes just almost as long to weigh and premix a 25 kilogram batch as it does to mix a tonne. After processing a small batch, it will take just as long to clean the extruder belt or a grinder as it would for a big batch.

Summary of selection

It appears that, with its nominal 400 kilogram per hour extrusion rate, the extruder we have chosen will give us the required annual output.

Our smallest batch is 500 kilograms so we should buy a premixer capable of dealing with that size. If we use a high-speed or "change-bowl" type of mixer, each premix batch may take approximately 15 minutes, including cleaning time. Testing and approving each mix through a laboratory extruder may take another 30 minutes. Corrections may take even longer and experience shows that most formulations need *at least* one adjustment, depending on the level of tolerance in the specification. In practice, many companies only approve the first premix of a particular batch and then let subsequent premix of the same material run to the corrected formula.

Theoretically, if we make an allowance for production peaks and troughs and for down-time, we can quote on average premix time as 30 minutes for 500 kilograms of premix. So,

one premixer could produce 16 batches in an 8-hour day (or 8 tonnes), which is more than adequate for our needs. We will, of course, need to "get ahead of the game" by having a number of containers to build up a reserve of premixes awaiting extrusion. Because of the risk of breakdowns and the need for maintenance, dependence on one premixer is undesirable. It is generally advisable to have a second unit, which could even be a simple drum hoop mixer.

Two pulverising mills complete the plan, giving us flexibility in grinding the product.

We have now effectively defined the major items of equipment needed to set up the operation. These are listed in Figure 5.

1. Weighing and charging equipment.
2. Premixer of 500 kg capacity.
3. 2 extra premix bowls or transfer bins.
4. Drum hoop mixer and spare drums.
5. Extruder - nominal output 400 kg/hour with feed mechanism & magnetic separator.
6. Cooling rolls, cooling band and kibbler.
7. 2 pulverising mills.
8. 1 Sieve
9. 4 powder collectors (filter bag or cyclone).
10. 1 fork-lift truck.
11. 1 laboratory extruder (15-25 kg per hour).
12. 1 particle size analyser

(minor items not included)

Figure 5 – Major Items of Equipment

Storage facilities for (say) six weeks stock of raw materials will also be needed. At our proposed production rate of 500 tonnes per annum, this amounts to 65 tonnes. We will also need a similar quantity of finished goods, amounting to another 65 tonnes or so. Both of these stock levels are negotiable. Financial considerations may mean that we have to compromise and reduce both levels. This must be balanced with the availability of supplies and the risk of running out of an ingredient.

We will complete this Section by looking at a possible layout for our plant. In Figure 6 we have illustrated a general arrangement but please note that this is not drawn to any particular to scale. It should be regarded as a general guide only, as each manufacturer will create an individual layout to suit his needs, within the constraints of the site.

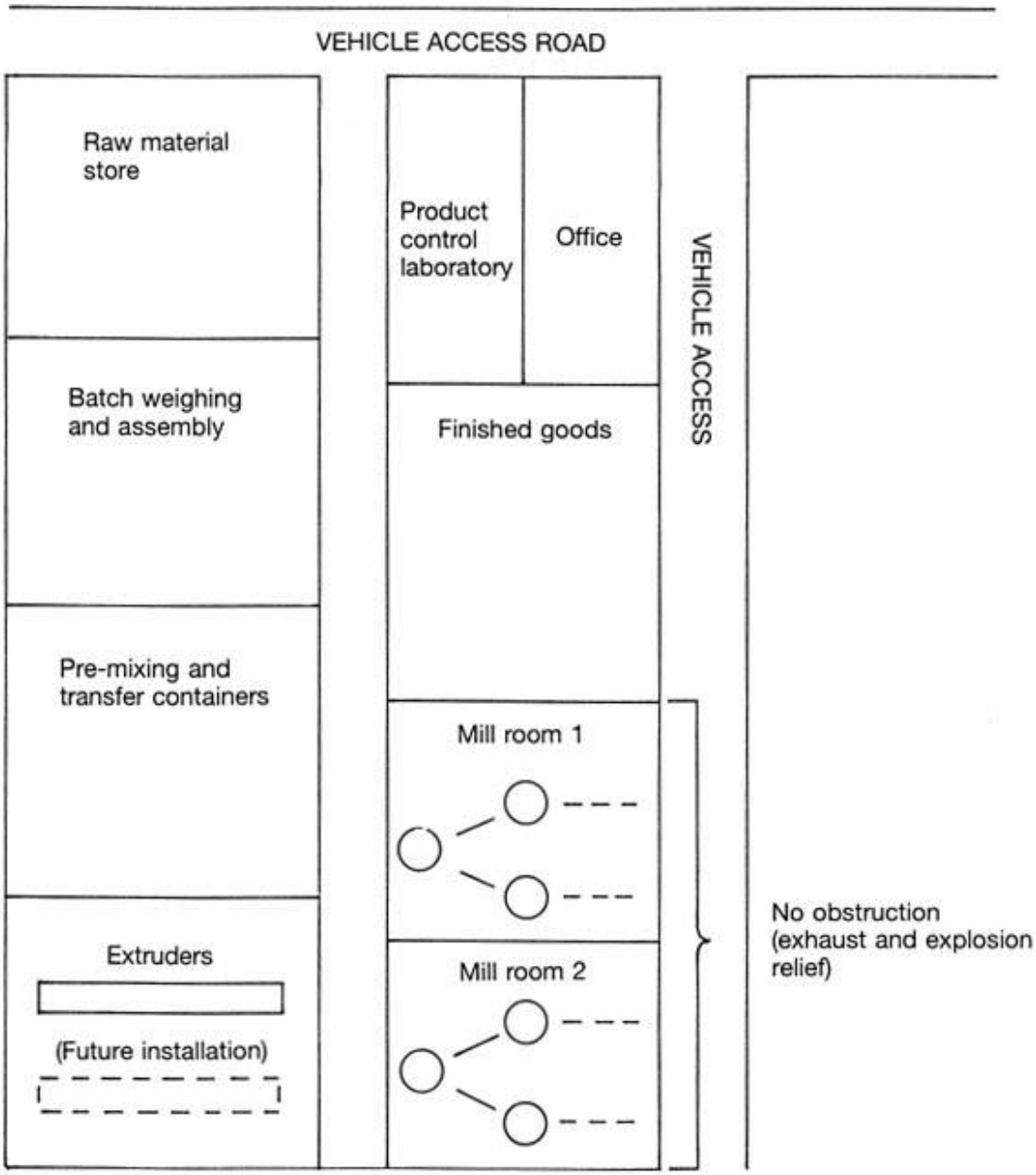

Figure 6 – Plant layout – Hypothetical Factory

If you refer back to Figure 1 again, you will see that there are lines separating each of the sections A, B & C. In Section A the premix stage, and even more so in Section C, the grinding stage, the operations involve moving dry particles around.

When designing the layout of the plant, it is important to consider the real possibility that cross-contamination may occur and to arrange for segregation of the different sections. In their undispersed form, some raw materials can severely disrupt the flow and appearance of finished products. Similarly, different types of resin media cause finished

products to affect each other. Experience has shown that this is one of the most problematical areas of powder production and we shall discuss this further in Section 1.3. Efficient extraction must be installed to remove dust particles but some powder dust will still escape into the atmosphere.

Although some producers prefer a continuous production line, there is a strong argument for separating the three stages A, B & C by siting them in separate rooms. This will minimise the risk of general cross-contamination and, in particular, the risk of dust getting onto the cooling extrudate. The walls between the separate areas through which the work in progress is transferred, should be fitted with doors. A good arrangement is to have automatic doors which open as the fork lift truck approaches. The rooms in which the three stages are sited need to be close to each other, so that movement of work in progress is kept to a minimum.

The layout of the plant should be in the nature of a flow process, so that operations do not cross one another unnecessarily. The raw material store and the quality control laboratory should also be situated as near to the manufacturing unit as possible.

We will need to supply electrical power, water and compressed air to operate and clean the various parts of the machinery. Calculations should be made of the electrical loadings needed to power the equipment, especially during at start up. Heat exchanger systems will be needed to supply refrigerated water to cool belts and rollers.

Laboratory Facilities

In addition to the production extruder we would prefer a separate laboratory extruder for quality and production control, together with other test apparatus. Some small manufacturing units often use their production extruders as the opportunity arises, for laboratory development work, raw material testing and proving of batches.

Alternative processes

Innovative production processes are being developed which may one day replace the extruder / grinder method. One such method is the use of "supercritical carbon dioxide". In this technique, CO_2 is introduced to the premix at very low temperature and high pressure. Under specific conditions, the gas liquefies and will then act as a solvent for the medium. This allows a more intimate blend of raw materials and the opportunity for improved pigment dispersion. The dispersed material is atomised and the CO_2 evaporates, leaving particles that are more round in shape and with particle sizes in a tighter range than is found using grinding methods.

It is reported that powders made this way show improved application properties and, since there is no heating required during processing, there is no doubt that the method

would allow far more latitude in terms of resin selection. It may also mean that colour correction can be done *after* dispersion, so that the colour accuracy of powders will approach that of liquid paints. Hopefully this technique, pioneered by Ferro, may have an impact on our industry in the future.

Another technique that has been thoroughly investigated and patented is the dispersion of ground powder to form an aqueous slurry, which can then be applied using conventional liquid technology.

An extension of this idea, which has been shown to work on a laboratory scale, avoids the need for grinding altogether. The molten extrudate is dispersed directly into a hot aqueous medium and the mixture cooled to form a solid-in-liquid suspension. However, the development of these ideas into practical manufacturing techniques is still some way off so in this Module we have concentrated solely on the extrusion / grinding method.

SAQ 3 - Why are laboratory facilities so important to our operation?

Section 2 - Costing considerations - economics

Here we will try to relate the likely cost of the plant to the potential volume sales and profitability. This will be very much a theoretical exercise as there are many unknown variables involved in each calculation.

2.1. Return on Capital

Figure 7 shows the *theoretical* calculations for the annual output from the extruder.

Nominal rate quoted by supplier	400 kg/hour
Allowing for difficult products	350 kg/hour
Number of batches per day	1.4
Cleaning time per day (1.4 x 30mins)	0.7 hours
Time allowed for production peaking and maintenance (15% x 8 hours)	1.2 hours
Available extrusion time per day	6.1 hours
Actual daily rate at nominal 350kg/hour	2135 kg
Annual rate (47 weeks)	**501725 kg**
	(= 501.7 tonnes)

Figure 7 – Estimated Annual Output Rate from Extruder

In Figure 8 we have brought all our theoretical production data together with estimated installation costs as well. We have then used an imaginary sales value and operating costs so, we can calculate the operating profit and the time required to pay back the capital invested in this project. Obviously, time will erode the accuracy of the information and students might like to carry out an exercise to update them, for their own interest. Nevertheless, they serve to show the factors that affect investment decisions.

This calculation is vastly over-simplified but it is important to carry out a *realistic* assessment of this sort when considering the selection or purchase of the plant.

	£	
Capital cost		
Equipment, installation and provision of services	750,000	
Operating costs		
Cost of capital at, say, 15%	112,500	
Labour and supervision	102,000	
Quality control		26,000
Electricity - lighting and power	17,000	
Heating and water	7,300	
Site overheads (waste disposal, repairs, consumables)		27,000
R&D	46,000	

	369,300	

Sales value @ £3.40 per kilo	1,700,000	
Cost of sales		
Raw materials and containers	1,020,000	

Selling/admin/transport		178,000

		1,198,000
Gross profit in Year 1		
Sales value less operating costs less cost of sales		132,700
Pay back based on Year 1 figures of	£750,000 / £132,700	= 5.65 years

Figure 8 – Estimated Cost of Installation, Operating Costs, Operating Profit and Capital Payback

SAQ 4 - What would be the effect of halving the average batch size in the above example?

2.2. Methods of Costing Product

When you manufacture a product, you need to know how much it has cost to make. That cost will have a significant effect on the selling price. You may be surprised to find that there is no "right" way of determining production costs. The method will depend on company policy and will have big influence on the ultimate success or failure of the operation.

A common method of costing used in the industry, (and used in the examples shown,) is to calculate the *average return per kilogram* needed to cover costs and, roughly speaking, to apply this uniformly across every batch.

The trouble with this *average costing* method is that the loading for production cost is too evenly distributed, taking no account of the relative manning and material costs of the different batch sizes.

- Small batches will be relatively underpriced with respect to the time and manpower they take to make them. Selling prices will be relatively attractive to the customer, making those products easier to sell, so there is a tendency to sell more of them than perhaps planned. It may take as long to make 25 kilograms as it does to make 500 kilograms and so these products may mop up a disproportionate part of the resources.

- At the other end of the scale, the more cost-effective, larger batches have too high a loading placed on them and become uncompetitive.

Using this costing technique, if you sell sufficient quantities of product at the predicted *average* selling price, in the time available and without incurring extra costs, then you will make the predicted profit. However, the normal scenario for operations of this sort is that, each year, there are disproportionately large sales of smaller batches and costings perpetually have to be rejigged. If the average cost method is used year-on-year, the problem becomes more and more exaggerated.

To avoid this downward spiral, it is essential that management understand the factors that affect *their* plant. For example, for each stage in manufacture, they need to appreciate the effects of:

- handling and throughput rates – small batches use the same equipment, only less efficiently; cheap raw materials may slow down production output rates.
- Manpower costs – the smaller the batch, the higher the cost of manual operations like weighing, quality control and cleaning.
- Material losses – the smaller the batch, the greater the percentage loss.

Another method used in industry to decide selling price is to define a fixed *gross margin* rate, based on raw material cost, which the Company determines as necessary to generate a suitable profit on budgeted sales. The RM cost may take into account the raw material losses.

The policy is to apply a simple factor to determine a minimum selling price, as in the examples in Figure 9. The theory is that, given annual sales with the predicted product mix, a definite profitability will be achieved. Here, it takes no account of costs relating to batch size. It also loads excessive overheads and general costs onto what are already more expensive products, pricing the company out of those markets. In practice, sales departments may achieve relatively higher prices for smaller batches but these do not necessarily make sufficient contribution to factory costs. That needs to be balanced by the larger orders.

Raw Material cost / kilogram:	£1.10	£1.50	£2.50
Budgeted Gross Margin factor	0.4 (40%)	0.4 (40%)	0.4 (40%)
Selling price = $\frac{\text{RMC}}{(1 - \text{GM factor})}$	£1.83	£2.50	£4.17
Gross Margin / kilogram:	£0.83	£1.00	£1.67

Figure 9 – Example of costing by average percentage Gross Margin

This technique is equally flawed. Obviously, the net result is that the lower the raw material costs, the cheaper will be the products sold and the less will be the contribution to manufacturing costs. In practice, it costs only a fraction more to produce a material with expensive raw materials than it does with cheap ones (The extra cost is in funding higher value stocks.) In general, this method leads to a similar decline as in the previous method.

A third method is to calculate the *contribution* per batch. Contribution is that value, over and above the raw material cost, that can be used to run the business. Once sufficient product has been sold to cover the annual overhead costs, all contribution from further sales is effectively all profit. This factor allows true comparisons to be drawn between the value to the business of manufacturing low cost, large volume or high cost, low volume products.

Some companies evaluate each stage of their operation, *allocating ratings* proportional to the manpower and time employed. These can then be given monetary values based on the distribution of overhead and operating costs. For any given product it will be possible to provide an estimate of the pro-rata cost of manufacture by taking the sum of the ratings for the operations involved in its manufacture.

Competitive pricing is extremely important for the success of the Company. As well as understanding the customer's needs and having sufficient market intelligence to define the sales value of their products, sales departments need to have a thorough awareness of the factors influencing factory costs. Likewise, production departments need to understand what the marketplace wants and to plan production facilities accordingly.

With their combined knowledge, management can slant prices towards obtaining those orders with the highest profitability, or seek to change production techniques to suit.

SAQ 5 - List three examples of costing methods that might be applied to such an operation?

2.3. Factors affecting Production Efficiency

The efficiency of our plant will depend on a number of factors. To achieve maximum profitability we need to produce as much product as possible in the shortest time possible and at the highest contribution possible. If we are lucky we may be able to plan production in a logical order for optimum efficiency. If order volume exceeds capacity, we may even find it necessary to choose which products will generate the most contribution. But back to reality....!

Demand / Product Mix

More usually we will be faced with pressures for urgent deliveries to be produced in random order. Customers need a seemingly endless array of colours, gloss levels, textures and resin binder systems, for application to items ranging from the most basic waste paper bin to the most sophisticated automotive component. Consequently, compared with other sectors of industry, we have a massive product range and make a large number of batches. This makes production planning difficult and so, overall, production time is lost due to the need for more thorough cleaning than by the optimum route.

Batch size and the range of products are usually the most important factors affecting efficiency in powder manufacture.

Formulation

When considering production efficiency, one factor that is often forgotten is the effect of the formulation. The choice of materials can dramatically affect production output rates. For example:

- Some pigments may be difficult to control in the premixing stage, continuing to develop with every re-mix, making colour adjustment difficult. Changing to a less problematical product or masterbatching the original materials to encapsulate it, may overcome such difficulties.

- Certain resin systems (e.g. some textured products) can be slow to extrude. Cheap, heavily filled formulations may not form a melt properly, hindering dispersion.

- Other resin systems are difficult to grind. They do not fracture into fine particles easily because they are too resilient,

- The tendency to thin film powders, with their emphasis on finer particle size, will put an increased strain on grinding facilities.

- And of course, all through the process, we have the old problem of compatibility, slowing us down with the need to clean.

That is where the skill of the formulators comes to the fore. Their expertise in creating formulations with high output rates can have a dramatic effect on a company's performance.

Continuity of Raw Material Supplies

It is essential to have sufficient raw materials to produce each product. Remember that formulations usually contain at least six raw materials and, if any one of them is missing, we will not be able to proceed. Changing a formulation may take up valuable development time and may have unforeseen consequences such as batch-to-batch incompatibility of resin systems or metamerism between different pigment mixtures.

Planning supplies has to be balanced against the cashflow needs of the Company. We do not want to tie up valuable cash as raw materials that will sit in the stores, possibly deteriorating in quality, on the off chance that we will need them some day. Stock control is a science all by itself.

Down time

Maintenance - Setting time aside to carry out routine maintenance is absolutely vital to the efficient running of any production plant. In the UK safety regulations insist that companies produce a programme of scheduled maintenance.

Breakdowns – Equipment may occasionally fail. Well-maintained machinery does not fail so often. Most production managers will plan for contingencies.

Cleaning **-** Earlier, we emphasised the need for thorough cleaning of plant between batches. There is a great deal of misunderstanding concerning cleaning; about what *must* be cleaned and what is not so important. In the past, emphasis was always placed on avoiding strong colour changes. Whilst this is still preferable, more important still is the need to understand the surface chemistries of the various product types and to make sure that, wherever possible, we avoid running a material with high surface tension directly after one with low surface tension. In extreme cases, where the degree of incompatibility of different types of powder is very severe, it may be necessary to make these in completely separate manufacturing units.

Most people are aware that resins such as acrylics or silicones can cause cissing in other powders. The same effect occurs in many other cases too, though to a lesser degree, so sensible sequencing of colour *and* medium is advisable:

- The greater the colour difference between two consecutive products, the more we need to ensure that the mixer, extruder hopper, barrel and die-head are clean.

- The more surface active the last resin system made, (i.e. the lower its viscosity and the lower its surface tension,) the more important it is to ensure that every point *after the barrel* is thoroughly clean.

The extruder barrel can usually be scoured thoroughly without opening it, by purging with a suitable mixture. Whatever is used, it must not damage the metal liner or screws of the machine. Resins such as polyethylene, unplasticised PVC or Plexiglas have been used for this purpose. Other materials such as coconut husks or nutshells have also been tried!

If our next batch is of a similar colour and product type, cleaning time will be minimal. We can often pass the second batch through the extruder after only a brief purge. However, if we made, say, a black powder and followed it with a white one, inadvertently leaving some of the black *in* the extruder barrel, we might expect the final product to be *tinted* off shade, especially at the beginning of the run. If areas of the equipment after the extruder were left uncleaned, the risk of getting black spots in the white powder during grinding would be quite high. For example, cooling belts, kibblers and grinding chambers are another common source of particulate contamination, as they have many nooks and crannies where kibble and dust can build up.

More importantly perhaps, following a polyurethane powder with an epoxy-polyester hybrid, for example, would probably result in film defects in the hybrid and if the hybrid followed an acrylic, then it would most certainly cause problems.

Our production plan must allow for this. It is a good idea to keep some premix containers for light shades and some for dark ones. Ideally, we should try to plan our production, so that we do not make extreme changes of colour from light to dark, from dark to light or from strong to weak pigments.

Certainly, the powder collectors should be dedicated to either light or dark shades to minimise the number of times that we have to clean the equipment. If the ground product is collected via filter bags, these will need to be cleaned or changed very regularly, but cyclone recovery units are easier to clean and, there, after-filters are not important in terms of contamination.

If attempts to plan production in this way fail, we must resort to cleaning, which can be time consuming and wastes valuable production resources.

In many companies, it is common practice to clean premixing equipment, extruder belts, kibblers and grinder cyclone systems by washing with water. This is an excellent way of reducing batch-to-batch contamination risks and avoids the unnecessary, contaminating and dangerous practice of blowing dry powder from belts with airlines. When customers see water-washing operations, many are concerned at possible adverse affects on powder fluidisation and charging characteristics. This procedure is unlikely to cause problems unless the end product itself becomes grossly contaminated.

The powder application equipment used in the Quality Control testing area also needs to be checked and cleaned. For example, a venturi feed will tend to build up a film of adhered powder after a time. The quality of the air supply to the guns and feed hoppers should be

checked and the oil and water separators in the air lines removed and emptied regularly. Spray guns need to be dismantled for cleaning with each change of product.

SAQ 6 - Make a list of those factors that you consider most important in determining the output tonnage of powder through the plant.

SAQ 7 - What principle would guide you in planning the sequence of manufacture operations where several colours and different types of powder are to be used?

ASG 1 - Examine the processes involved in manufacturing batches of powder of sizes (a) 25 kilogram, (b) 250 kilogram (c) 1 tonne and (d) 5 tonne, using various options available in a given powder manufacturing unit. Estimate the relative allocation of manpower, machine time and costs such as raw material losses associated with each manufacturing route and suggest an optimum route for each batch. Discuss the relative merits of each batch within the context of the overall operation.

Section 3 – Production Control

Ultimately, our products will be used to coat customers' products. Therefore we must ensure that the powders meet the required specification. Most of the following points apply equally well to both manufacturers and users of powder coatings.

3.1. Quality Control

In this Section, we will be concerned with measuring batch-to-batch reproducibility of the product, so that the customer receives an almost seamless supply of material. We therefore need to apply tests that will identify whether of not the finished product is up to standard.

Modern mass-production techniques dictate that we have good control of all stages of manufacture, from ensuring we have reliable stocks of raw material supplies to the control of storage and transport. We do not have time to test every batch to every parameter. To control the process we need to have administrative systems and good supervision as good as the testing procedures themselves.

Module I22 describes the methods used to evaluate powder coating, so we will not go into great detail here about the test procedures used. Nor will we concern ourselves with the many long-term tests involved in proving a powder formulation. When testing *production quality,* we will assume that, providing the correct raw materials have been selected in the correct proportions and that the processing has been carried out properly, the finished

product will pass the required number of hours in a salt spray cabinet or a given number of years in Florida.

The first essential for a powder coatings test area is that it should be orderly and clean. The dusty nature of the powder requires that it is handled carefully and that regular cleaning with a vacuum cleaner is carried out.

The development laboratory will specify suitable production tests when issuing the formulation. These will include such items as:

- *Curing properties* – We must ensure that the coating will develop suitable physical properties when cured. Undercured powders tend to be brittle because of insufficient cross-linking of the polymer. Therefore, if we spray sample of product and cure it for a prescribed time, we should expect it to pass the physical tests such as mandrel bend, impact, Erichsen deformation, crosshatch adhesion or pencil hardness.

- *General appearance* – As far as the customer is concerned, the gloss, colour and flow are the most obvious and therefore the most important features of any coating product. Special effects such as texture patterns will also be important. We therefore need to make sure that these are correct. Although colour is often measured using computers these days, there are many companies who still prefer visual matching.

- *Film defects* - Overheating in the extruder can lead to pre-gelling of the medium, causing bits to form; Contaminants may also creep in. Oil or grease on the surface of the substrate

- *Dry Powder Flow* – Thermosetting powders are almost universally applied by electrostatic spray. A powder needs to have good fluidisation properties, so that it can be transported down pipelines without surging. To a great extent, this property is controlled by particle size characteristics. There are several tests available for determining these characteristics. One method involves the determination of the angle of repose of a heap of the powder. In another more sophisticated method, the sample is placed in a controlled fluidisation apparatus.

- *Charge transfer Efficiency* - The product will also need to accept electrostatic charge efficiently. (Tribostatic powders will need to *generate* charge efficiently.) Often a simple spray-out will give a guide to these characteristics but where customers have large, automated plants, more formal tests might need to be applied.

- In some instances, we may be asked to check such factors as gel time, glass transition temperature (T_g) or flow characteristics but usually these will only become important if something has gone wrong and we are investigating what has happened.

- On rare occasions, it may sometime be necessary to hold a batch in quarantine until it has been tested and proved to comply with longer-term tests. An example of this is when products need to meet Toy Regulations. A formulation may be nominally free of any hazardous materials, but, during processing, the product itself may pick up sufficient quantities of contaminants such as lead pigment to fail the test.

  Figure 10 gives a summary of the sorts of tests that might be applied to powder coatings, in-house:

Test	Procedure	Results
Appearance – flow – cratering/cissing – contamination	Visual/ magnifying lens	 Compare with standard None No foreign spots on film
Colour	Compare with standard (visual/colour computer) *See BS3900 Pts D1(+D8-D9)	Commercial match
Gloss	Reflectance meter *See BS3900 D5	Within specified limits
Solvent resistance	50 double rubs (methyl ethyl ketone)	No loss in gloss If slightly softened, should recover
Flexibility	Conical mandrel (1/8 – 1/4") *See BS3900 E11	No cracking
Adhesion	Cross hatch *See BS 3900 E6	No lifting
Hardness	Pencil (H-9H)	Pass specified hardness
Note: Other tests may be required depending on product and end use.		

Figure 10 - Quality control tests

SAQ 8 - List the sorts of tests you might expect to carry out to determine the quality of a newly-made product.

3.2. Problems and Troubleshooting

Finally, we will consider some of the problems that may arise when testing powder coatings, the cause of these problems and the remedial action that can be taken.

Variations in raw material quality – All raw materials vary from batch to batch and it is important that formulations and techniques are as tolerant as possible. We know about variations in pigment strengths and allow for this in colour matching, but they are not the

only problem. For example, there can be significant differences in surface tension between different resins of the same type and even between batches of the *same* product. This can cause products such as textures and dry blends, which are particularly sensitive to changes in surface tension, to behave unpredictably.

Bits and fibres – There are a number of possible sources of bits and nibs in the cured film. For example:

(a) They may be present in the raw materials. Resins may contain gel particles produced during their production. In powder manufacture we use micronised pigments and extenders. Undispersed aggregates can cause bits.

(b) If processing temperatures in the extruder are too high or the dwell time too long, some of the resin may cure. The over cured material may be indistinguishable from the rest in the ground powder form but, when sprayed and cured, the gelled particles will not flow and melt.

(c) The substrate may not have been pretreated sufficiently, leaving swarf, grit, dust or which is visible in the cured film.

(d) General debris may become mixed into the product at any stage.

Pinholing or cissing - machining lubricants, for example, may have been left on the surface of the items to be coated or dust may not have been properly removed. This can give rise to ciss marks, fish eyes or pinholes in the cured film. Also, in some porous materials, such as castings, it is possible for air trapped in pockets in the surface to expand during the curing cycle causing eruptions that are often mistaken for bits.

Cross contamination - We have seen how batch size and frequency of change can affect efficiency and profitability of the company. Each change brings the risk of contaminating the new product with the previous one, leading to coloured specks or ciss marks in the film. So cleaning between batches is crucial.

Low levels of contamination are *endemic,* on all exposed surfaces during powder manufacture, including:

- Ductwork and recovery systems
- The workplace atmosphere
- Girders, ledges, walls and floors and
- Testing and spraying areas

There will *always* be some contamination in any powder, often present in very low concentrations with a similar particle size to the base product. For this reason the contaminant cannot be found easily in the bulk powder, even when viewed under the microscope. Operators are usually convinced that they are looking for much larger particles because of the relatively large size of any craters or specks in the cured finish.

In some cases, when the product has lower surface tension than the contaminant, a powder system can mask the effect of the contaminant and may be tolerant even in concentrations as high as 1 part in 1000 and with dramatically contrasting shades. On the other hand, if the contaminant has the lower surface tension, it may give rise to visible contamination at concentrations as low as 1 part in 100,000! This explains why it is possible to pick up contamination from products which have not been made or used for several days - the contamination has always been there but the products made in between times have not been susceptible.

If this masking effect did not take place, powder manufacture would become practically impossible. Nevertheless, its existence suggests that there is the possibility of formulating to enhance the protection.

Ideally, if we could plan the manufacturing process so that we followed one material with another that was totally compatible with the colour and surface chemistry of the first, we could dramatically reduce, if not eliminate, cleaning. Unfortunately, demand does not usually occur in such an orderly fashion, so few production managers are permitted such a luxury.

In our earlier discussion, we commented that contamination is everywhere (endemic.) Regular, thorough cleaning routines and well-thought out production planning, combined with the good sense of the formulators, should minimise any risks. We should also remember that it is possible to have made perfectly "clean" product only to introduce contamination during testing. Potential sources include overalls, equipment used in taking or preparing samples, spray guns, hoppers and stoving ovens.

Poor application properties. – Properly controlled milling /grinding of the kibble is essential for good application. Too fine, and the powder will be difficult to fluidise. It will surge in the gun and may be difficult to electrostatically charge. If powder is ground too coarse, particle size may adversely affect flow and appearance.

Poor gloss / haze – In some circumstances a nominally glossy formulation may give rise to a "sleepy" finish. This is often raised as a complaint about an otherwise acceptable batch of powder, which was manufactured without problems. This fault is usually found after mixing different batches or even boxes of the *same batch* of the *same product*. It is caused by disruption of the surface due to mixing two products with very slightly different concentrations of surface-active ingredients such as flow agents. The usual cause is separation (de-mixing) of the different sized particles during feeding into the extruder. When agitated, dry mixtures tend to separate, with larger particle floating to the top,

causing the extrudate to be richer in that separated item at the end of the mix. The problem is usually associated with plants with long feed ducts to the extruder. It is not usually found if high-speed mixers are used, since these tend to crush all particles down to a common size.

SAQ 9 – What problems would you expect to arise as a direct result of processing faults?

3.3. Health and Safety

Finally, we will look at the hazards inherent in the materials and processes and the how the associated risks can be controlled. The law requires that all risks be controlled as far as possible. The general techniques used in modern health and safety are described in Module I33.

Substances – all of the finished products and most of the raw materials are dusts. Organic dusts represent a number of risks:

(a) If large concentrations are inhaled over long periods of time, they can cause chronic lung diseases such as emphysema.
(b) Some dusts may cause sensitisation (e.g. skin allergies or asthma) in particularly sensitive people.
(c) Some dusts can display other hazards such as are toxicity, causing cumulative effects (e.g. lead-based pigments), or carcinogenic effects (e.g. TGIC)
(d) Dusts suspended in air, in high concentrations, may ignite – sometimes spontaneously - and cause a fire or even an explosion.

Other substances used in our factory include solvents, which are sometimes used in cleaning operations. These too may be toxic and highly flammable.

Hazardous materials need to be identified and appropriate methods of control introduced. Often extraction equipment will maintain a safe working environment but this may need to be supplemented with Personal Protective Equipment (PPE) such as masks, gloves and visors. Remember, PPE should only be used as a last resort, when all other methods have been employed. Remember too that the Safety Data Sheets (SDSs) provided by raw materials are only guidance for *your own risk assessment* of the use of that material.

Personnel - the law requires that every person is competent to carry out their jobs. In other words, each person needs to be educated to a suitable level for their job, informed about the hazards involved and trained in how best to control them. Factors such as the impact of manual handling operations, ergonomics and an individual's fitness for the job need to be assessed. Hygiene training should be given to all employees.

Administrative systems – Every company in the UK needs to have in place procedures to allow then to regularly identify hazards, assess risks and prepare plans for reducing or controlling them. Most companies are required to produce and distribute a formal safety policy and to make their staff aware of it. Accidents must be reported and investigated in order to prepare strategies to prevent them happening again.

Training and instruction should be a high-profile activity within a company. Signs and posters are a good way of reinforcing the training message.

Management and supervisory staff must be made aware of their legal obligation to enforce safety rules vigorously and to not "turn a blind eye".
Conditions in the Workplace – There are a number of regulations that set standards for the work environment. Employers must provide suitable working conditions for their employees. For example, noise levels and working temperature must be controlled; adequate lighting must be provided.

For example, on the question of noise, grinding/milling machines can be exceptionally noisy and employees should be made aware of the risks of the permanent damage that can be caused to their hearing and of the ways they must operate reduce the risk.

Equipment provided – All work equipment must be safe for the operator and there are regulations covering aspects such as guarding, electrical safety, pressurised air systems and maintenance. Safety gear such as PPE and emergency equipment such as spill kits or fire extinguishers must also be provided, where necessary. Again, staff will need to be trained in its proper use.

As an example, extruder belts have a number of inherent hazards. It is well known that the moving rollers used to flatten and cool the extrudate and the kibblers used break the cooled flake can cause serious injury to anyone coming in to contact with them. Operators must be protected using a suitable combination of interlocks and guards.

There are no hard and fast rules about how companies must to operate, only general principles, so it is inappropriate to state too many specific examples. These are items that individual managements need to assess in the light of their own operations. For their part, the Health and Safety Executive in the UK offer guidance on virtually every aspect of operations.

SAQ 10 – What methods can be used to ensure that operators in a powder coatings plant are aware of all potential hazards and the precautions that they should take?

That is the end of the study material. When you are satisfied with your understanding of the work, carry out the CMA and submit it for marking.

After that, you will be ready for the End Test which will be arranged in the near future.